EXTERIOR FINISHES–AZ

EXTERIOR INSULATED FINISH SYSTEM :	DRYVIT (SANDPEBBLE FINE) COLOR: E.I.F.S. 1 = #113 AMARILLO WHITE
BRICK WAINSCOT: (GRADE TO PRECAST SILL)	**BELDEN – "MODULAR MIDLAND BLEND A"**
BRICK (ABOVE WAINSCOT):	**BELDEN – "MODULAR HAMILTON BLEND A"**
BRICK SOLDIER COURSE:	**BELDEN – "MODULAR HAMILTON BLEND A"**
PRECAST SILL:	LIGHT BUFF COLOR (REFER TO PRECAST SILL PROFILE)
MORTAR:	LEHIGH – "LIGHT BEIGE"
MASONRY SEALER:	ALL MASONRY SURFACES SHALL BE TREATED W/SEALER REFER TO SPECIFICATIONS.
METAL CANOPY:	AWNEX CANOPY SYSTEM – COLOR TO MATCH PAC-CLAD "SILVER"
COPING, SOFFIT AND TRIM:	PAC-CLAD SNAP EDGE EXTENDED FASCIA (12-1/2") PAC-CLAD COLOR "SILVER" VENTED SOFFIT AND TRIM COLOR TO MATCH PAC-CLAD "SILVER"
ROOF SCUPPERS & DOWNSPOUTS:	MASTIC HOME EXTERIORS BY PLY GEM – DESERT SAND
STOREFRONT SYSTEM:	2x4 1/2" KAWNEER TRIFAB VG 451T SERIES CLEAR ANODIZED ALUMINUM STOREFRONT SYSTEM W/1" INSULATED GLAZING.
H.M. DOORS, FRAMES, LADDER, & CAGE:	FIELD PAINT w/SHERWIN–WILLIAMS B66–310 PRO–CYRL PRIMER FOLLOWED BY (2) FINISH COATS OF B66–300 SHER–CYRL HPA. COLOR SHALL BE SW–7515 "HOMESTEAD BROWN". PROVIDE MOCK–UP AND VERIFY COLOR W/OWNER.
OVERHEAD DOORS:	CLEAR ANODIZED ALUMINUM
PARKING LOT STRIPING:	SHERWIN–WILLIAMS #TM226 SETFAST TM PAINT. COLOR SHALL BE "WHITE".
HANDICAP STALL STRIPING:	SHERWIN–WILLIAMS #TM2133 SETFAST TM PAINT. COLOR SHALL BE "ADA BLUE".

SIGNAGE SCHEDULE

NUMBER	DESCRIPTION	SIZE	ILLUMINATED	QUANTITY
600	LOGO SIGN	7'–8" X 5'–11" (45 S.F.)	INTERNALLY	2
	PROVIDED BY OWNER, INSTALLED BY SIGN CONTRACTOR			
601	LANE INDICATOR SIGN	10'–0" X 1'–4" (13.33 S.F.)	NO	2
	PROVIDED BY OWNER, INSTALLED BY SIGN CONTRACTOR			
602	OPEN SIGN	2'–7" X 1'–10" 4.7 S.F.)	INTERNALLY	2
	PROVIDED BY OWNER, INSTALLED BY G.C.			
603	MONUMENT SIGN	6'–6" X 6'–9" (44 S.F.)	INTERNALLY	1
	PER LOCAL AND DEVELOPMENTAL RESTRICTIONS			
604	LOGO SIGN	4'–11" X 6'–5" (31 S.F.)	INTERNALLY	1

ELEVATION NOTES

1. EIFS SHALL BE DRYVIT, CLASS PB DRAINAGE SYSTEM WITH FLUID APPLIED WATER RESISTIVE BARRIER BEHIND INSULATION BOARD.
2. SIGNAGE SHOWN ON THESE ELEVATIONS IS FOR GENERAL REFERENCE PURPOSES ONLY. ALL SIGNAGE SHALL BE APPLIED FOR & PERMITTED UNDER A SEPARATE SIGNAGE SUBMITTAL.
3. G.C. SHALL PROVIDE BLOCKING IN STUD WALL BEHIND EACH SIGN AS REQUIRED BY SIGN VENDOR – FIELD VERIFY REQUIREMENTS W/ VENDOR & OWNER'S REPRESENTATIVE.
4. **ALL FLASHING, DRIP EDGE, SCUPPERS, AND DOWNSPOUTS, ETC. SHALL MATCH MANUFACTURER'S STANDARD DETAILS.**

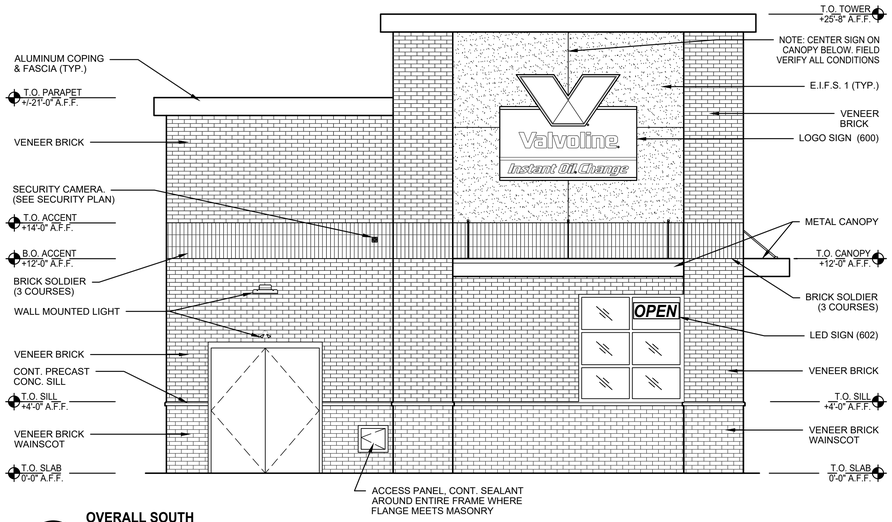

1 OVERALL SOUTH
EXTERIOR ELEVATION
SCALE: 1/4" = 1'-0"

AZ_2BLH A3 Exterior Elevations.dwg

	TOTAL AREA (A)	AREA EXCLUDING WINDOWS, DOORS, ROOFING & SOFFIT (B)	AREA OF EXTERIOR BUILDING MATERIALS OR COLOR USES (C)	PERCENTAGE OF AREA OF EACH QUALIFYING EXTERIOR MATERIAL (C/B)
NORTH FACADE	645 SF	417 SF	BRICK,MASONRY–385 SF	92%
			CORNICE/SILVER–32 SF	8%
EAST FACADE	1237 SF	890 SF	BRICK,MASONRY–686 SF	77%
			EIFS/AMARILLO WHITE–146 SF	16%
			METAL CANOPY & CORNICE/SILVER–58 SF	7%
SOUTH FACADE	771 SF	687 SF	BRICK,MASONRY–502 SF	73%
			EIFS/AMARILLO WHITE–138 SF	20%
			METAL CANOPY & CORNICE/SILVER–47 SF	7%
WEST FACADE	1121 SF	856 SF	BRICK,MASONRY–801 SF	94%
			CORNICE/SILVER–55 SF	6%

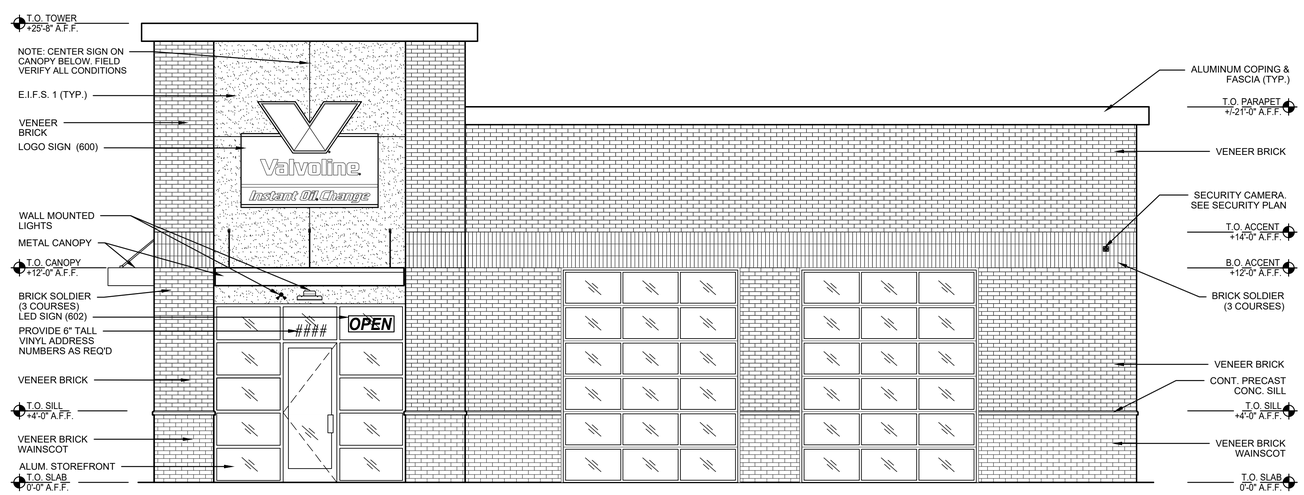

2 OVERALL EAST
EXTERIOR ELEVATION
SCALE: 1/4" = 1'-0"

AZ_2BLH A3 Exterior Elevations.dwg

BRICK-BRICK OPTION

CESO
WWW.CESOINC.COM
175 MONTROSE WEST AVE., SUITE 400, AKRON, OH 44321
PHONE: (330) 665-0660 FAX: (888) 208-4826

No.	Revisions/Submissions	Date

VALVOLINE INSTANT OIL CHANGE
2370 EAST MAIN STREET
PLAINFIELD, IN 46168

© 2018 CESO, INC

Project No.	-
Scale	AS NOTED
Drawn	CESO
Checked	JSB
Date	xx.xx.18

Drawing Title
EXTERIOR ELEVATIONS

Drawing No. **A-3a**

W:\PROJECTS\VALVOLINE\756165-PLAINFIELD, IN (E MAIN ST)\02-BLDG\PLAN\DWG\Prelim Elevations\2BRH-AZ-EXTWR ArchCAD\AZ_2BLH A3 Exterior Elevations, 7/17/2019 11:33:55 AM, MCLOUD

EXTERIOR FINISHES–AZ

EXTERIOR INSULATED FINISH SYSTEM :	DRYVIT (SANDPEBBLE FINE) COLOR: E.I.F.S. 1 = #113 AMARILLO WHITE
BRICK WAINSCOT: (GRADE TO PRECAST SILL)	**BELDEN – "MODULAR MIDLAND BLEND A"**
BRICK (ABOVE WAINSCOT):	**BELDEN – "MODULAR HAMILTON BLEND A"**
BRICK SOLDIER COURSE:	**BELDEN – "MODULAR HAMILTON BLEND A"**
PRECAST SILL:	LIGHT BUFF COLOR (REFER TO PRECAST SILL PROFILE)
MORTAR:	LEHIGH – "LIGHT BEIGE"
MASONRY SEALER:	ALL MASONRY SURFACES SHALL BE TREATED W/SEALER REFER TO SPECIFICATIONS.
METAL CANOPY:	AWNEX CANOPY SYSTEM – COLOR TO MATCH PAC-CLAD "SILVER"
COPING, SOFFIT AND TRIM:	PAC-CLAD SNAP EDGE EXTENDED FASCIA (12-1/2") PAC-CLAD COLOR "SILVER" VENTED SOFFIT AND TRIM COLOR TO MATCH PAC-CLAD "SILVER"
ROOF SCUPPERS & DOWNSPOUTS:	MASTIC HOME EXTERIORS BY PLY GEM – DESERT SAND
STOREFRONT SYSTEM:	2x4 1/2" KAWNEER TRIFAB VG 451T SERIES CLEAR ANODIZED ALUMINUM STOREFRONT SYSTEM W/1" INSULATED GLAZING.
H.M. DOORS, FRAMES, LADDER, & CAGE:	FIELD PAINT w/SHERWIN-WILLIAMS B66-310 PRO-CYRL PRIMER FOLLOWED BY (2) FINISH COATS OF B66-300 SHER-CYRL HPA. COLOR SHALL BE SW-7515 "HOMESTEAD BROWN". PROVIDE MOCK-UP AND VERIFY COLOR W/OWNER.
OVERHEAD DOORS:	CLEAR ANODIZED ALUMINUM
PARKING LOT STRIPING:	SHERWIN-WILLIAMS #TM226 SETFAST TM PAINT. COLOR SHALL BE "WHITE".
HANDICAP STALL STRIPING:	SHERWIN-WILLIAMS #TM2133 SETFAST TM PAINT. COLOR SHALL BE "ADA BLUE".

SIGNAGE SCHEDULE

NUMBER	DESCRIPTION	SIZE	ILLUMINATED	QUANTITY
600	LOGO SIGN	7'-8" X 5'-11" (45 S.F.)	INTERNALLY	2
	PROVIDED BY OWNER, INSTALLED BY SIGN CONTRACTOR			
601	LANE INDICATOR SIGN	10'-0" X 1'-4" (13.33 S.F.)	NO	2
	PROVIDED BY OWNER, INSTALLED BY SIGN CONTRACTOR			
602	OPEN SIGN	2'-7" X 1'-10" 4.7 S.F.)	INTERNALLY	2
	PROVIDED BY OWNER, INSTALLED BY G.C.			
603	MONUMENT SIGN	6'-6" X 6'-9" (44 S.F.)	INTERNALLY	1
	PER LOCAL AND DEVELOPMENTAL RESTRICTIONS			
604	LOGO SIGN	4'-11" X 6'-5" (31 S.F.)	INTERNALLY	1

ELEVATION NOTES

1. EIFS SHALL BE DRYVIT, CLASS PB DRAINAGE SYSTEM WITH FLUID APPLIED WATER RESISTIVE BARRIER BEHIND INSULATION BOARD.
2. SIGNAGE SHOWN ON THESE ELEVATIONS IS FOR GENERAL REFERENCE PURPOSES ONLY. ALL SIGNAGE SHALL BE APPLIED FOR & PERMITTED UNDER A SEPARATE SIGNAGE SUBMITTAL.
3. G.C. SHALL PROVIDE BLOCKING IN STUD WALL BEHIND EACH SIGN AS REQUIRED BY SIGN VENDOR – FIELD VERIFY REQUIREMENTS W/ VENDOR & OWNER'S REPRESENTATIVE.
4. **ALL FLASHING, DRIP EDGE, SCUPPERS, AND DOWNSPOUTS, ETC. SHALL MATCH MANUFACTURER'S STANDARD DETAILS.**

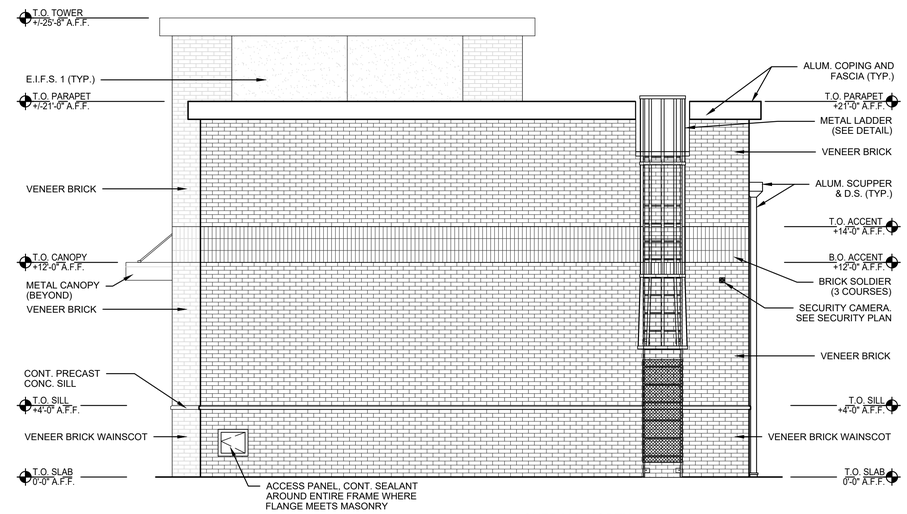

3 OVERALL NORTH
EXTERIOR ELEVATION
SCALE: 1/4" = 1'-0"

AZ_28LH A3 Exterior Elevations.dwg

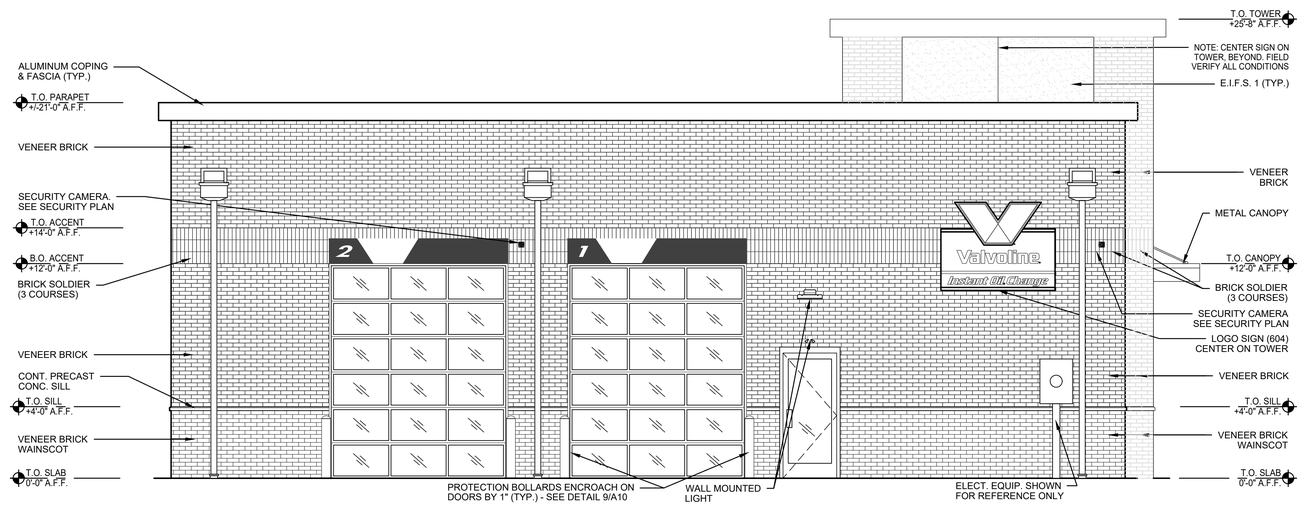

4 OVERALL WEST
EXTERIOR ELEVATION
SCALE: 1/4" = 1'-0"

AZ_28LH A3 Exterior Elevations.dwg

BRICK-BRICK OPTION

CESO
WWW.CESOINC.COM
175 MONTROSE WEST AVE., SUITE 400, AKRON, OH 44321
PHONE: (330) 665-0660 FAX: (888) 208-4826

No.	Revisions/Submissions	Date

VALVOLINE INSTANT OIL CHANGE
2370 EAST MAIN STREET
PLAINFIELD, IN 46168

© 2018 CESO, INC

Project No.	-
Scale	AS NOTED
Drawn	CESO
Checked	JSB
Date	xx.xx.18

Drawing Title
EXTERIOR ELEVATIONS

Drawing No.
A-3b

W:\PROJECTS\VALVOLINE\736165-PLAINFIELD, IN (E MAIN ST.)\02-BLDG\PLANDWG\Prelim Elevations\2BRH-AZ-EXTwR ArchCAD\AZ_28LH A3 Exterior Elevations, 7/16/2019 3:31:34 PM, MCLOUD

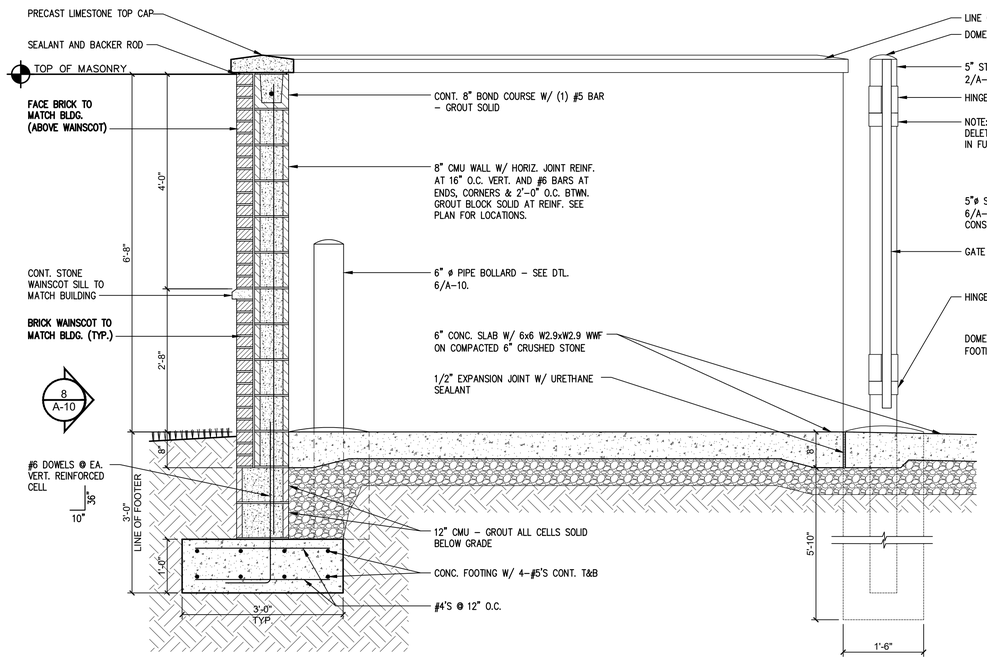

1 A-10 SECTION @ TRASH ENCLOSURE
SCALE: 3/4" = 1' – 0"

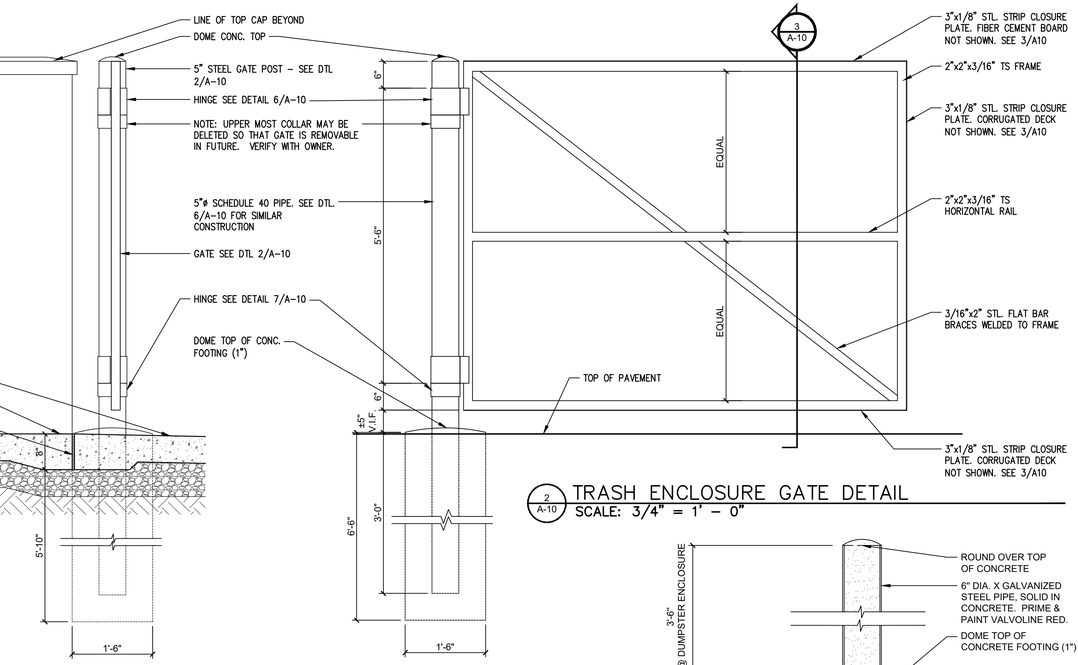

2 A-10 TRASH ENCLOSURE GATE DETAIL
SCALE: 3/4" = 1' – 0"

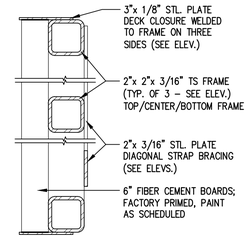

3 A-10 GATE SECTION
SCALE: 3" = 1' - 0"

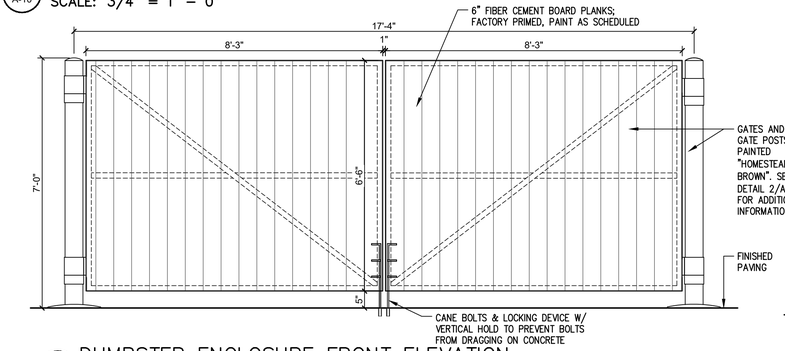

4 A-10 DUMPSTER ENCLOSURE FRONT ELEVATION
SCALE: 1/2" = 1' – 0"

NOTE: ALL EXTERIOR TRASH ENCLOSURE STEEL SHALL BE GALVANIZED

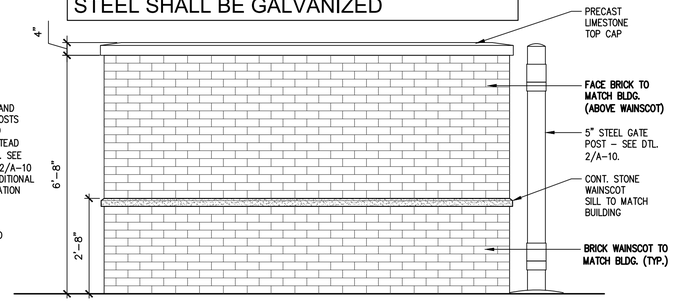

5 A-10 TYP. DUMPSTER ENCLOSURE SIDE ELEVATION
SCALE: 1/2" = 1' – 0"

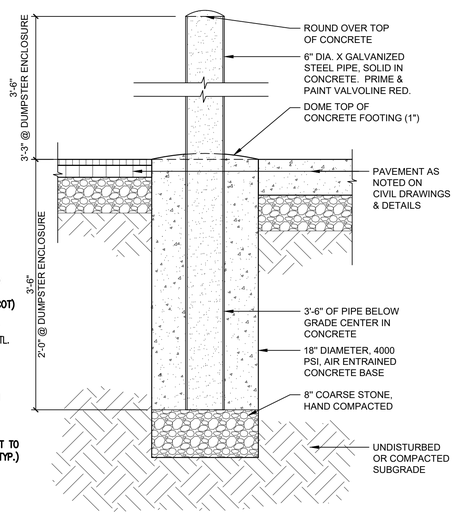

6 A-10 BOLLARD DETAIL
SCALE: 1" = 1' - 0"

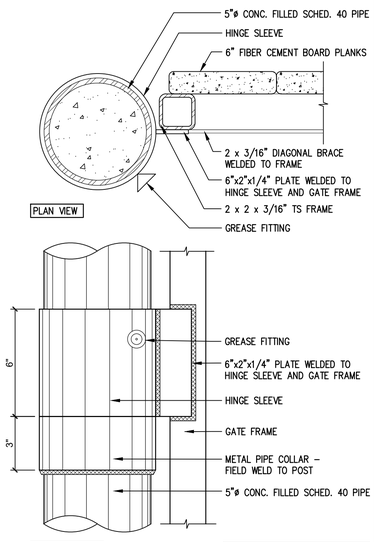

NOTE: (2) HINGES REQUIRED PER POST (TYP.) SEE DETAIL 2/A-10

7 A-10 HINGE DETAIL
SCALE: 3" = 1' - 0"

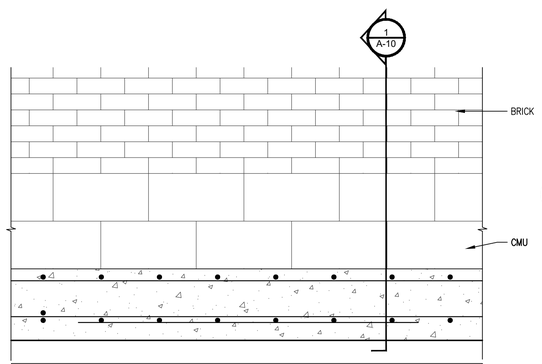

NOTE:
GATES SHALL BE EQUIPPED WITH DROP (CANE) BOLTS, HEAVY DUTY HINGES AND LATCHES (WITH PADLOCK) DRILL HOLES 2" DEEP IN CONC. / PAVING TO ALLOW DROP BOLTS TO HOLD GATES IN CLOSED POSITION AND AT AN OPEN POSITION OF 90°. POSITION VERTICAL HOLD TO KEEP CANE BOLTS FROM DRAGGING CONC.

8 A-10 FOOTING DETAIL
SCALE: 1" = 1' – 0"

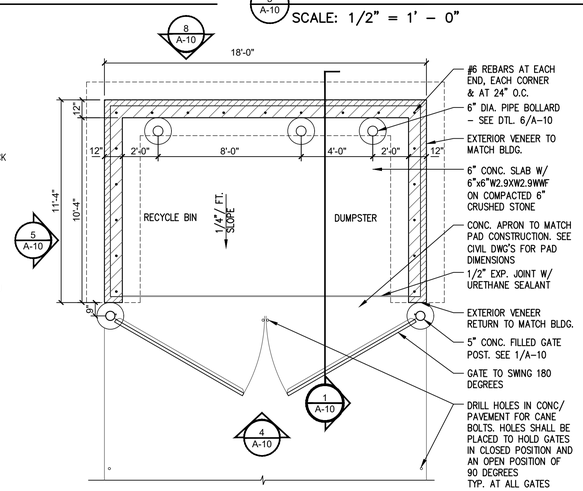

9 A-10 DUMPSTER ENCLOSURE PLAN
SCALE: 1/4" = 1' – 0"

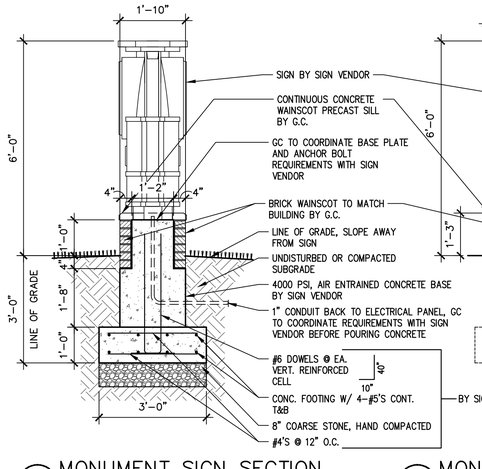

10 A-10 MONUMENT SIGN SECTION
SCALE: 1/2" = 1' – 0"

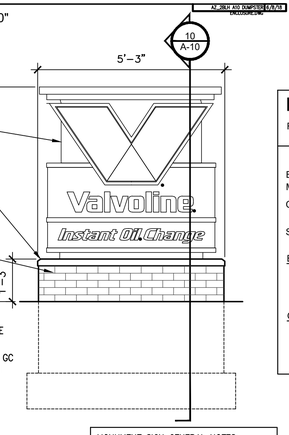

MONUMENT SIGN GENERAL NOTES:
1. ELECTRICAL CONDUIT BY GC.
2. ALL BRICK AND STONE WORK BY GC.
3. ALL REMAINING WORK SHALL BE BY THE SIGNAGE VENDOR. SHOWN FOR REFERENCE ONLY

11 A-10 MONUMENT SIGN ELEVATION
SCALE: 1/2" = 1' – 0"

DUMPSTER EXTERIOR FINISH NOTES

REFER ALSO TO "EXTERIOR FINISHES", SHEET A-3.

BRICK:	MATCH BUILDING BRICK
MORTAR:	MATCH BUILDING MORTAR
COPING:	PRECAST LIMESTONE CAP. COLOR TO MATCH BUILDING STONE WAINSCOT
SEALER:	ALL BRICK SURFACES SHALL BE TREATED W/ SEALER. REFER TO SPECIFICATIONS.

BOLLARDS / GUARD POSTS:
FIELD PAINT w/SHERWIN-WILLIAMS B66-310 PRO-CYRL PRIMER FOLLOWED BY (2) FINISH COATS OF B66-300 SHER-CYRL HPA. COLOR SHALL BE "VALVOLINE RED".

GATES & GATE POSTS:
FIELD PAINT w/SHERWIN-WILLIAMS B66-310 PRO-CYRL PRIMER FOLLOWED BY (2) FINISH COATS OF SHERWIN WILLIAMS 7515 HOMESTEAD BROWN. SEMI-GLOSS DTM ACRYLIC B66-200.

BRICK-BRICK OPTION

CESO
WWW.CESOINC.COM
175 MONTROSE WEST AVE., SUITE 400, AKRON, OH 44321
PHONE: (330) 665-0660 FAX: (888) 208-4826

No.	Revisions/Submissions	Date

VALVOLINE INSTANT OIL CHANGE
2370 EAST MAIN STREET
PLAINFIELD, IN 46168

© 2018 CESO, INC

Project No.	-
Scale	AS NOTED
Drawn	CESO
Checked	JSB
Date	xx.xx.18

Drawing Title
DUMPSTER ENCLOSURE

Drawing No.
A-10

W:\PROJECTS\VALVOLINE\756165-PLAINFIELD, IN (E MAIN ST)\02-BLDGS\PLAN\DWG\Prelim Elevations\2BRH-A2-EXTwR. ArchCAD\A2_2BLH A10 Dumpster Enclosure, 7/17/2019 11:41:03 AM, MCLOUD