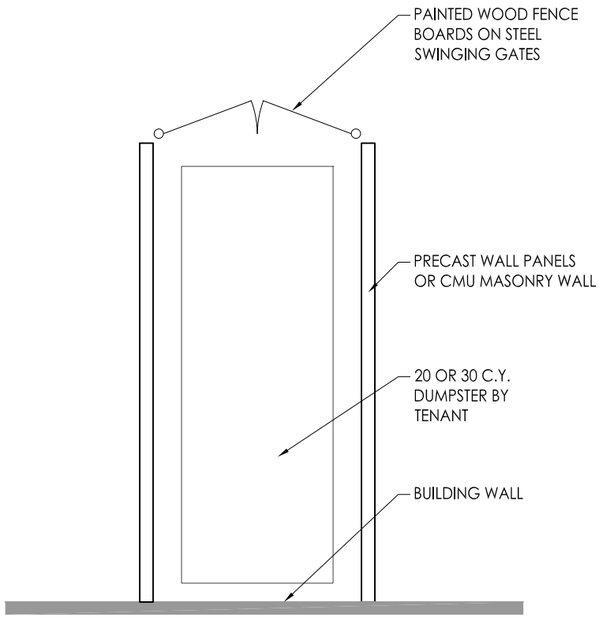

PLAN VIEW

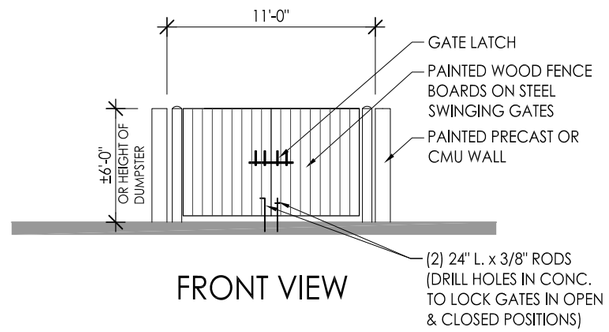

FRONT VIEW

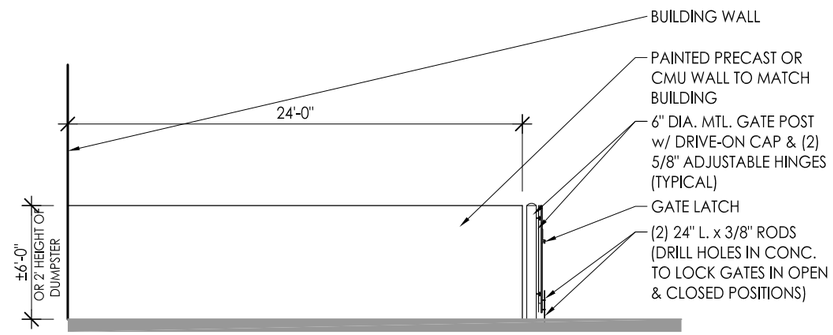

SIDE VIEW

Typical Dumpster Enclosure Plan & Elevations

Scale: 1/8" = 1'-0"

0 2' 4' 8' 16'

ARCHITECTURE®

19298_A
METRO AIR PHASE 2
25 APRIL 2019