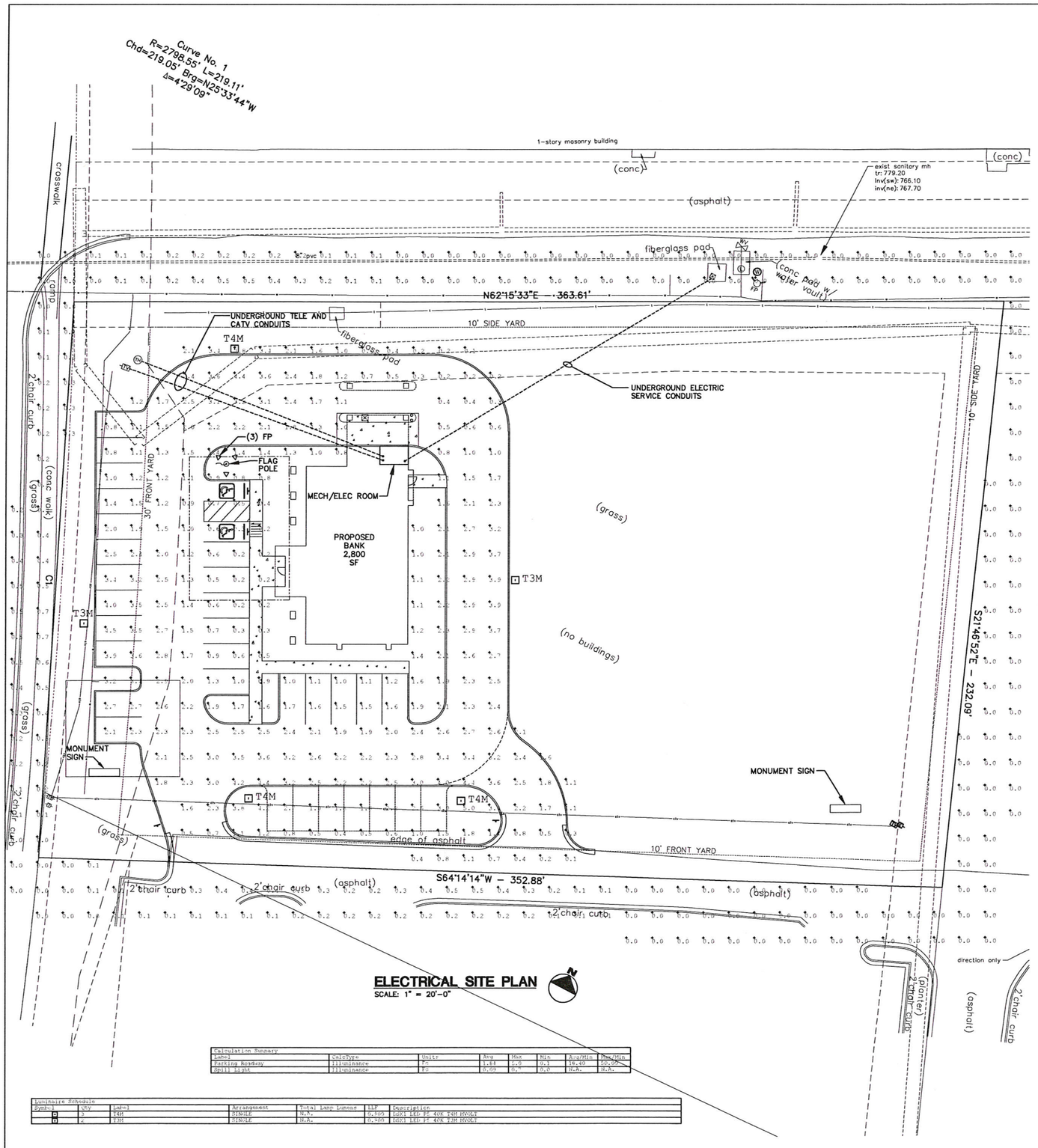

ELECTRICAL SITE PLAN

SCALE: 1" = 20'-0"

Calculation Summary							
Label	CalcType	Units	Avg	Max	Min	Avg/Min	Max/Min
Parking Roadway	Illuminance	Fc	1.84	5.0	0.1	18.40	50.00
Spill Light	Illuminance	Fc	0.09	0.7	0.0	N.A.	N.A.

Luminaire Schedule						
Symbol	Qty	Label	Arrangement	Total Lamp Lumens	LLF	Description
	3	T4M	SINGLE	N.A.	0.900	DSX1 LED P5 40K T4M MVOLT
	2	T3M	SINGLE	N.A.	0.900	DSX1 LED P5 40K T3M MVOLT

LIGHTING FIXTURE SCHEDULE

SYM	DESCRIPTION	MANUFACTURER	CAT. #	LAMP TYPE	LAMP WATTS	LAMP VOLT.	MOUNTING
T3M	SINGLE HEAD LED AREA LUMINAIRE WITH TWO ENGINES. TYPE III MEDIUM DISTRIBUTION, 40K. POLE MOUNTED 18'-0" TALL 5" SQUARE STEEL POLE. POLE COLOR SELECTED BY ARCHITECT.	LITHONIA	DSX1-LED-P5-40K-T3M-208-DF-XXX-SSS-18-5G-DM19AS-XXX	LED	138	208	POLE MOUNTED 18'-0"
T4M	SINGLE HEAD LED AREA LUMINAIRE WITH TWO ENGINES. TYPE IV MEDIUM DISTRIBUTION, 40K. POLE MOUNTED 18'-0" TALL 5" SQUARE STEEL POLE. COLOR SELECTED BY ARCHITECT.	LITHONIA	DSX1-LED -P5-40K-T4M-XXX-208-DF-XXX-SSS-18-5G-DM19AS-XXX	LED	138	208	POLE MOUNTED 18'-0"
FP	STANCHION LED FLOOD LUMINAIRE - MEDIUM SPOT WITH FULL VISOR. 40K COLOR SELECTED BY ARCHITECT.	LITHONIA	DSXF2-LED -P3-40K-MSP-208-IS-DF-FV-XXX	LED	102	208	CONCRETE PAD 6" ABOVE GRADE

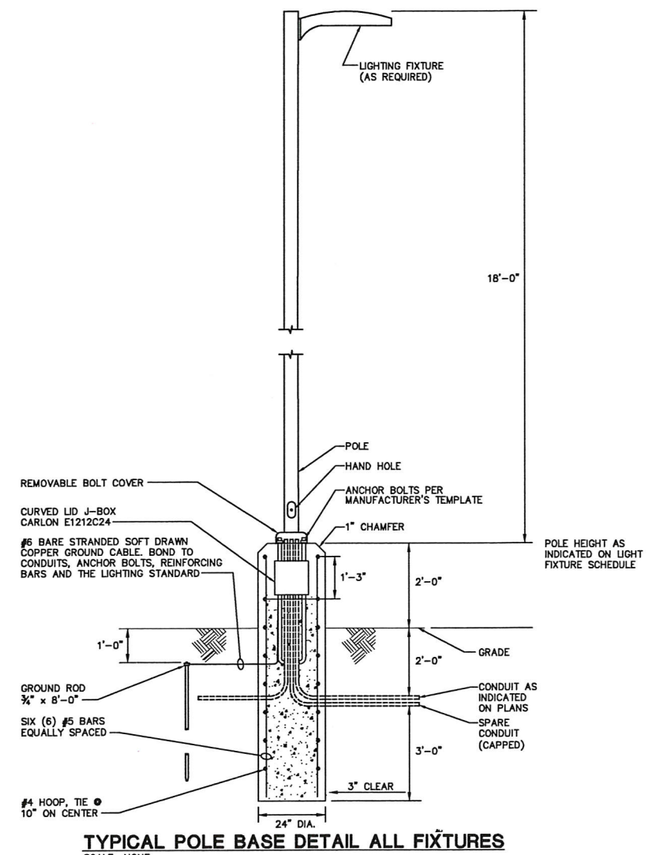

TYPICAL POLE BASE DETAIL ALL FIXTURES

SCALE: NONE

BCCLT CONSULTING ENGINEERS

Stock Yards Bank & Trust

PROPOSED BRANCH BANK
345S PERRY ROAD
PLAINFIELD, INDIANA 46168

JOB NUMBER 17181
DATE 01-22-18
DRAWN BY PTB

WILLIAM M. WELCH
ARCHITECTS
961 BAXTER AVENUE
LOUISVILLE, KENTUCKY 40204

SHEET NO. EU1.0

SHAMINDA HUBERT REGISTERED No. 10505748 STATE OF INDIANA PROFESSIONAL ENGINEER
01/23/18